ASSEMBLY AND INSTALLATION INSTRUCTIONS
PROTECT-A-RAIL® Louvered Cab Protector Models 1904 & 1905
PROTECT-A-RAIL® Cab Protector Models 1906 & 1907

IMPORTANT
BEFORE YOU BEGIN

Read these instructions and warnings completely before installation.

1916 - Mounting Base Kit for GM
1912 - Mounting Base Kit for Dodge
1913 - Mounting Base Kit for 1997 or newer Ford light duty trucks
1915 - Mounting Base Kit for Ford super duty and 1996 or older light duty trucks

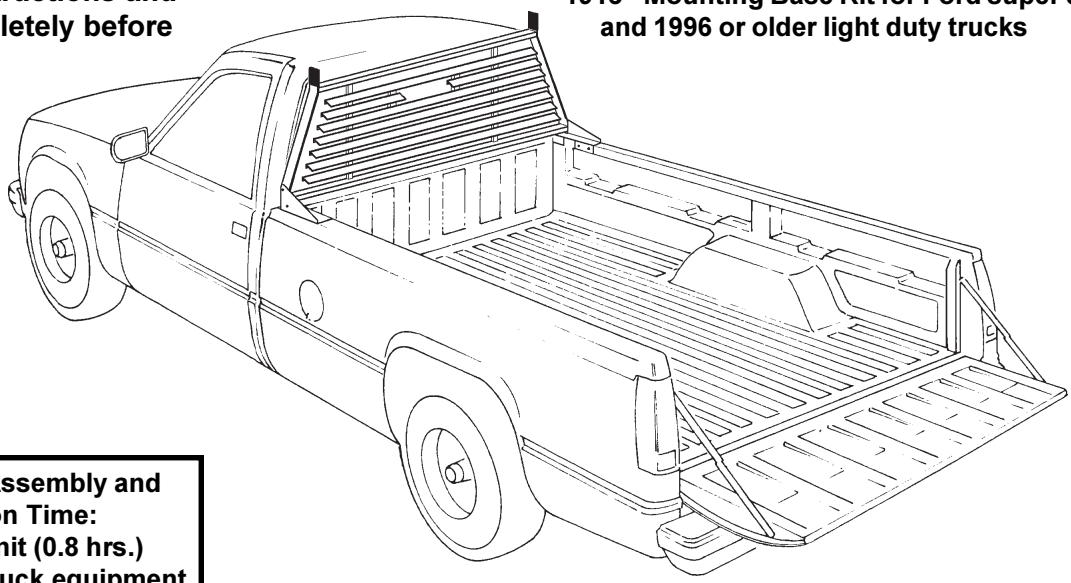

Approximate Assembly and Installation Time:
48 min. per unit (0.8 hrs.) depending on Truck equipment installation experience.

⚠ WARNING

This product can reduce the driver's ability to clearly see roadways, vehicular or pedestrian traffic and other objects through the rear and side windows of the vehicle, which may cause an accident. Extra precautions should be taken when driving a vehicle with this product. Make all adjustments necessary to ensure maximum visibility, including but not limited to, changing mirror and seating positions. State and local laws may prohibit obstruction of windows in a moving vehicle.

BOLT KIT

Bolt kit #32-0106 is provided with your Mounting Base Kit.
Check this bolt kit to be sure the following parts are included:

Qty.	Description
2	5/16-18 x 1-1/4" Hex Hd. Bolt
4	1/4-20 x 1-1/4" Hex Hd. Bolt
4	5/16" Flat Washer
2	5/16-18 Blind Fastener
1	5/16-18 x 2-1/4" Blk Ox. Bolt
2	5/16" Lock Washer
2	Shims
1	Installation Tool
6	1/4-20 Nylon Lock Nut
4	5/16-18 Nylon Lock Nut
4	5/16-18 x 1" Carriage Bolt
10	1/4" Flat Washer
2	1/4-20 x 1-1/2" Carriage Bolt

TOOLS REQUIRED

- Electric Drill
- Drill Bits - 7/32", 1/4", & 1/2"
- Open or Box End Wrenches - 7/16", 1/2", & 9/16"
- 3/8" Drive Ratchet
- Sockets - 7/16" & 1/2"
- C-clamp
- Utility Knife

weather guard®

Part No. 24-0094 REV. C ECN 5285 03/13

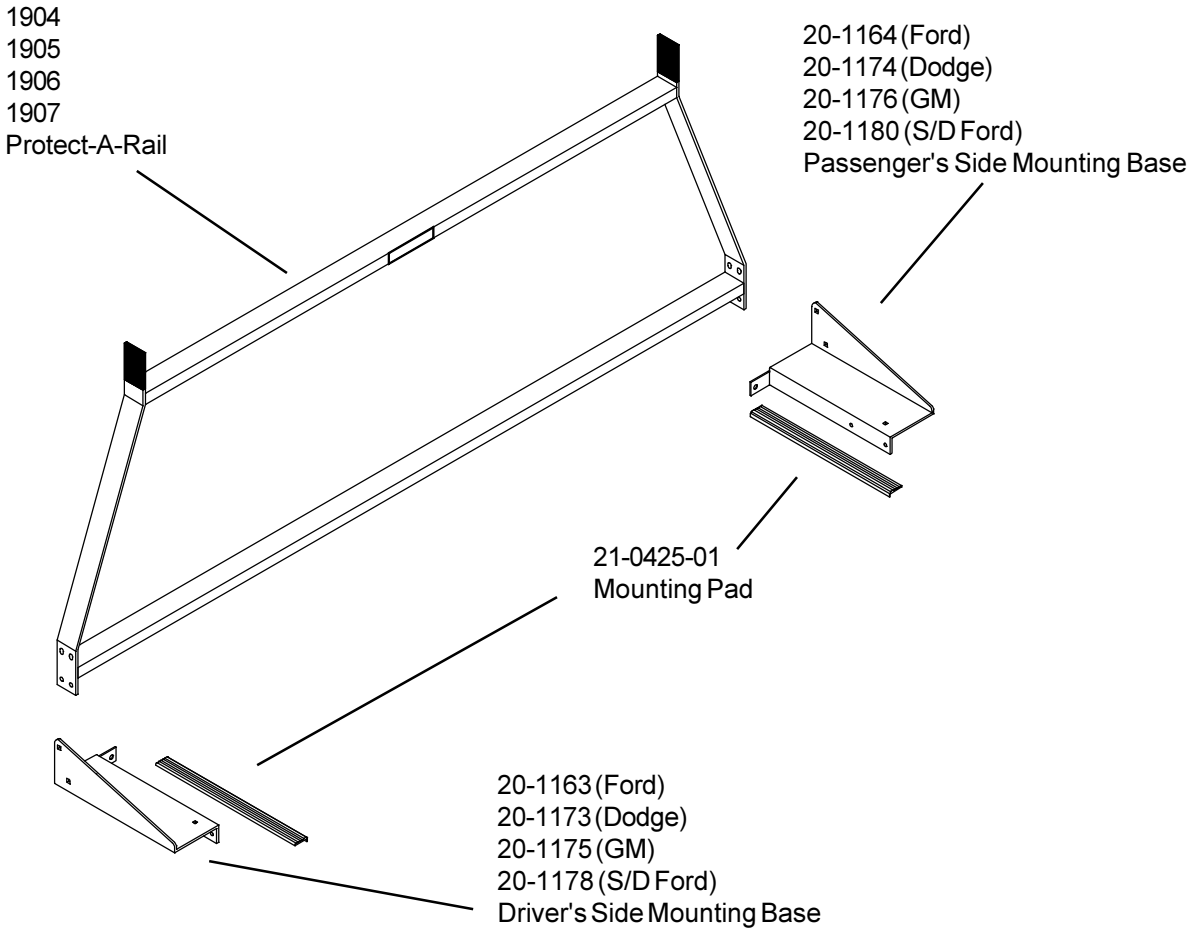

PERFORM THE FOLLOWING STEPS TO THE DRIVER SIDE & PASSENGER SIDE

Step 1. Protect-A-Rail to Mounting Base
Procedure
Place frame of unit between the bases and install fasteners.
(snug but do not tighten at this time)

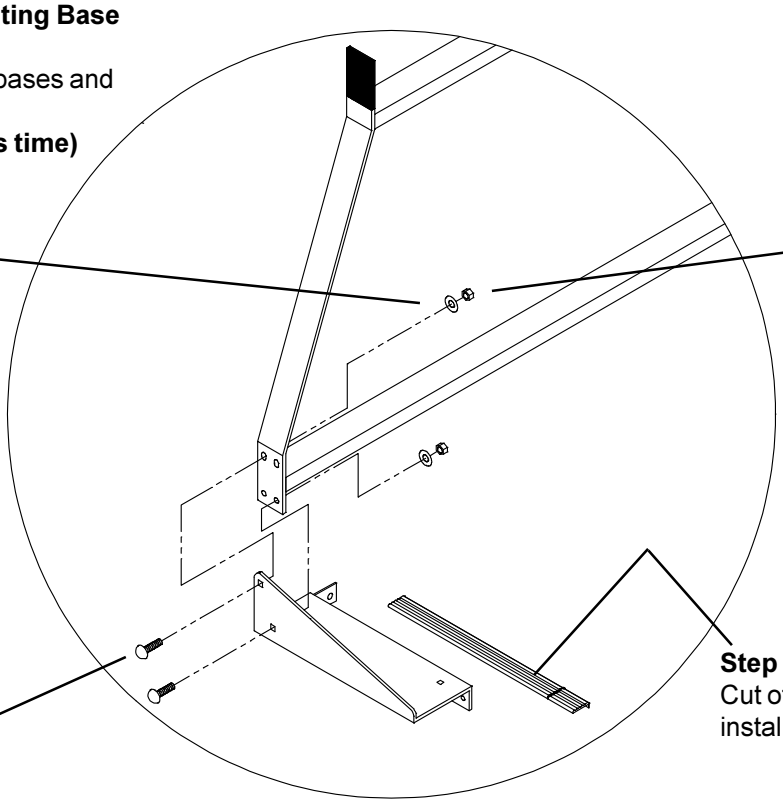

Step 2. Cut Mounting Pad
Cut off 2" and save for tool box installation.

Step 3. Tape Washer, Clamp, and Drill Top, Side, and Front (With Mounting Pads In Place)

NOTE: Remove any plastic tabs from the under side of the truck top rail that are in the way

⚠ CAUTION

To keep debris out of your eyes when drilling, always wear protective eyewear.

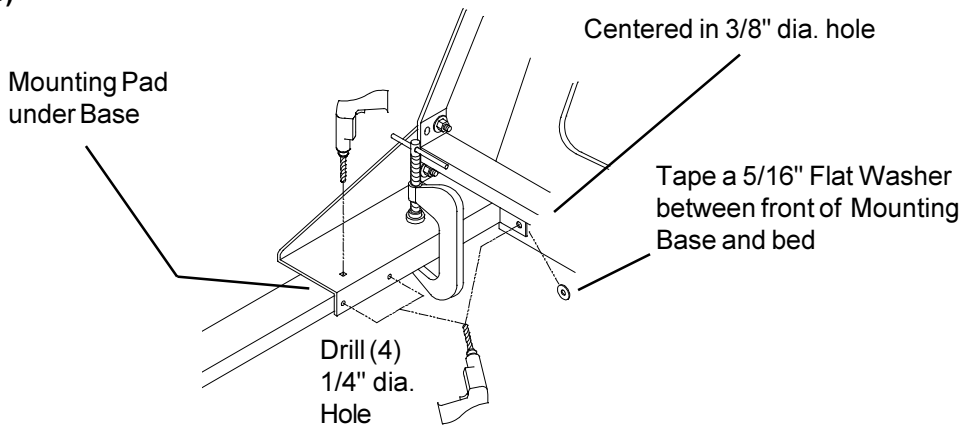

Step 4. Unclamp, Move Rack, Remove Flat Washer, Redrill Front Hole, and Install Blind Fastener

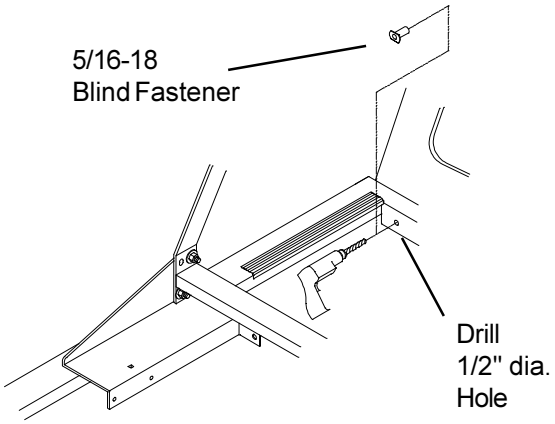

INSTALLATION PROCEDURE USING BLIND FASTENERS

Place a drop of oil on the black oxide bolt before assembling as shown at right. Place the Blind Fastener in the hole and use a 1/2" or 7/16" wrench to tighten black hex bolt until the blind fastener is fully seated. When setting black hex bolt, it will start out hard. As the Blind Fastener "bulbs" out it will get easier, until it bottoms out or sets. Make sure the Blind Fastener and Installation Tool do not turn during installation.

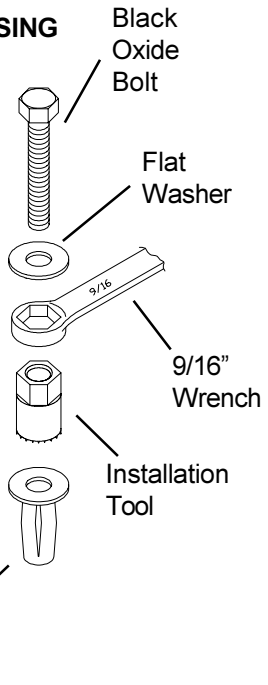

Step 5. Replace Rack and Install Top, Side, and Front Fasteners (tighten all fasteners)

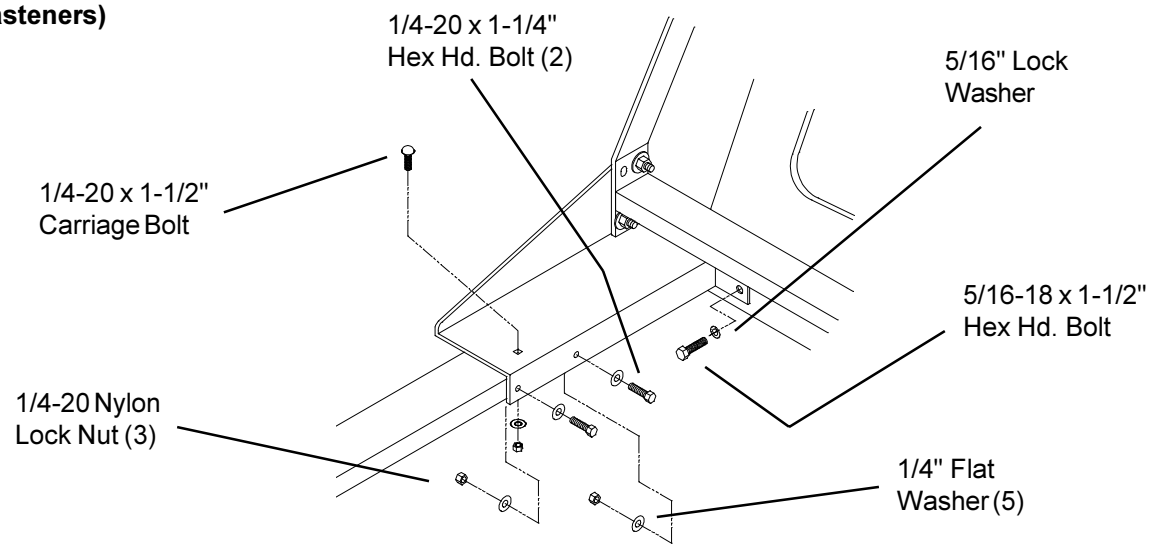

Cross, Saddle, and Side Box Mounting Procedure
If a truck mounted box is to be used with the Protect-A-Rail, use the 3/16" thick shims that are provided along with the 2" Mounting Pads that were cut off in Step 1. This will insure a level mounting of the box. Make sure the box cover(s) can be fully opened without hitting the louvered Protect-A-Rail. Check to make sure all fasteners are tight.

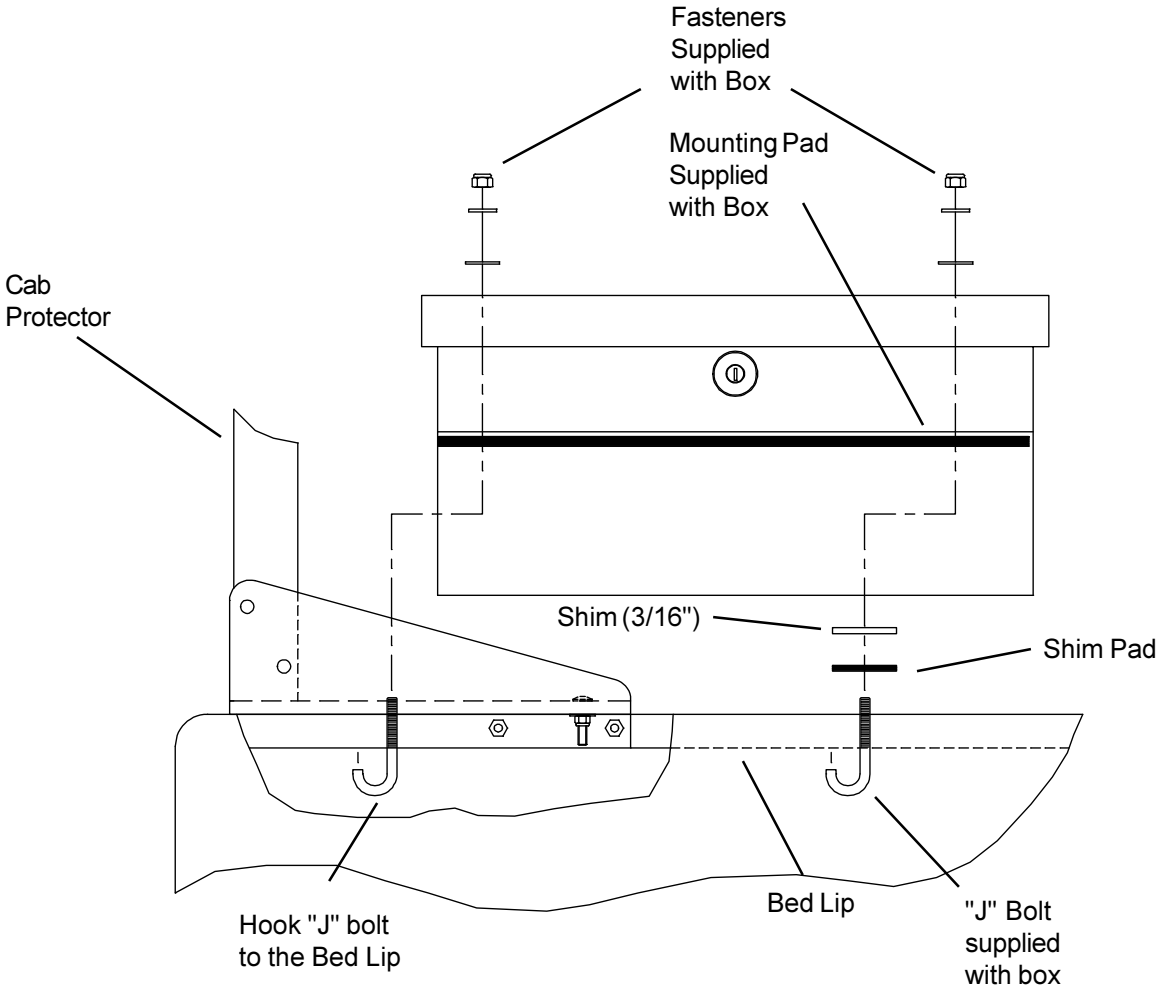

- NOTICE -

Any modification or unintended use of this product shall immediately void all manufacturers warranties. Manufacturer disclaims all liability for injuries to persons or property resulting from any modification to, or unintended use of this product.

WEATHER GUARD® products are protected by one or more of the following trademarks:
U.S. - 842268, 1661625, 1663369, 1750034, 2228051, 2291111, 2362167; Canada - 282725; U.K. - 1400720; N.Z. - 296049; Aus. - 761964
other trademarks pending.

Knaack LLC
ATTN: Warranty Claims
420 E. Terra Cotta Avenue
Crystal Lake, IL 60014

If you have any questions, please call toll free at 1-800-456-7865.
©2013 Knaack LLC

Part No. 24-0094 REV. C ECN 5285 03/13