ASSEMBLY AND INSTALLATION INSTRUCTIONS

Model 1280 Full Size Truck Rack (8 ft. Bed)

Approximate Assembly and Installation time:
1 hour 18 min. per unit (1.299 hrs.)
Depending on truck equipment installation experience.

IMPORTANT BEFORE YOU BEGIN

Read these instructions and warnings completely before assembly and installation.

NOTE: If your vehicle has a bedliner you may need to drill, trim, or cut the liner for proper installation of this product. If the bedliner extends over the top rail on the sides of the bed, this rack will not work unless the entire over the top section is removed.

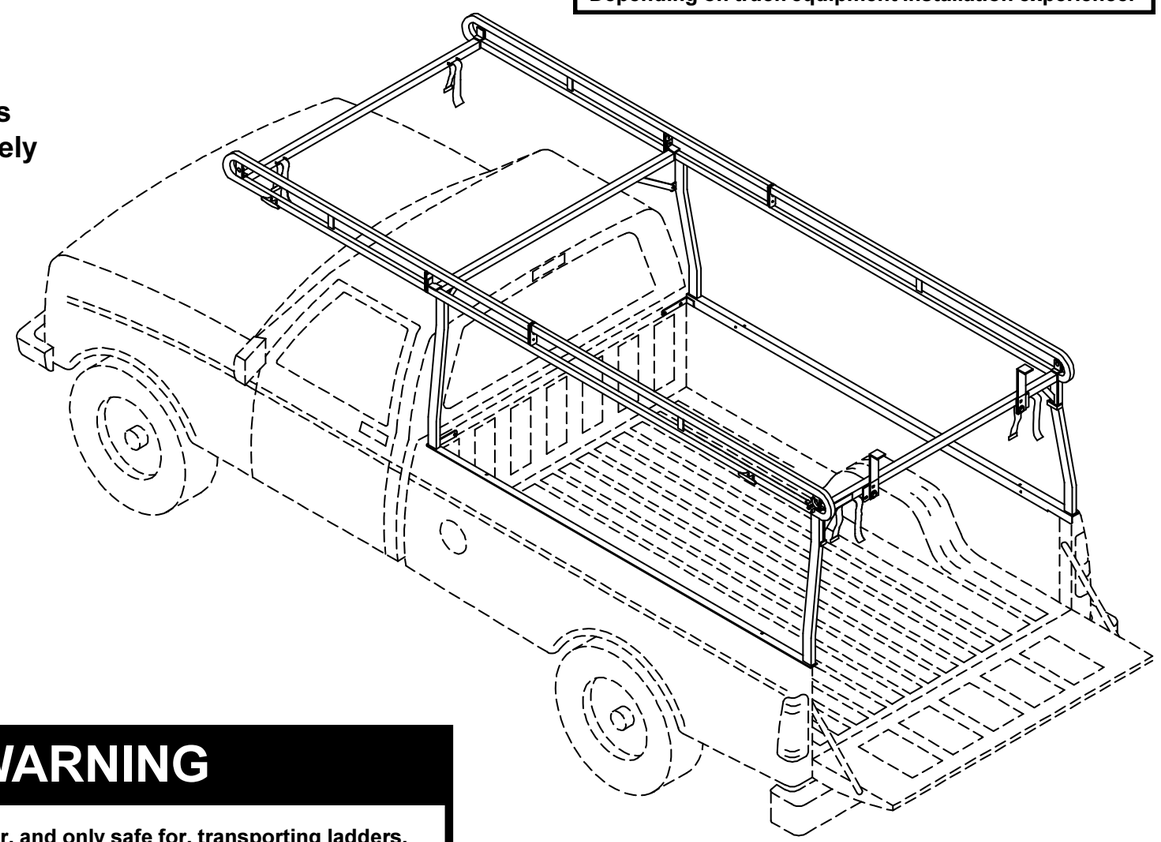

⚠ WARNING

This product is only intended for, and only safe for, transporting ladders, lumber, pipe and other similar materials. It is the responsibility of the user to secure these materials to the rack before transporting. Any modifications made to this product, or use of this product for any other purpose than its intended use, will create a hazardous condition that will cause serious personal injury or property damage.

⚠ CAUTION

Never load your rack to exceed the safe rated capacity of your vehicle. Heavy loads carried high can dangerously alter the center of gravity.

FAST RACK® SYSTEM

PARTS LIST

- 1 - Driver Side Leg/Base/Rail
- 1 - Passenger Side Leg/Base/Rail
- 1 - Driver Side Front Rail
- 1 - Passenger Side Front Rail
- Tube, E-6000 Sealant

NOTE: Crossmembers are packaged separately per vehicle model

- 1281 = GM Crossmembers
- 1282 = Dodge Crossmembers
  Model 1500 through 2001
  Models 2500/3500 through 2002
- 1283 = Ford Crossmembers
- 1284 = Super Duty Ford Crossmembers
- 1287 = Dodge Crossmembers
  2002 Model 1500 and 2003 Models 2500/3500 and newer

BOLT KIT

Bolt Kit #32-0102 is provided with your ladder rack. Check this bolt kit to be sure the following parts are included:

Quan.	Description
8	5/16-18 Nylon Lock Nut
6	5/16-18 x 1" Carriage Bolt
4	5/16-18 x 1-1/2" Hex Hd. Bolt
2	5/16-18 x 1-1/4" Carriage Bolt
8	5/16 Flat Washer
4	5/16" Lock Washer
4	5/16-18 Blind Fastener
4	1/4-20 x 1-1/4" Hex Hd.
8	1/4-20 Nylon Lock Nut
12	1/4 Flat Washer
1	Blind Fastener Installation Tool
1	5/16-18 x 2-1/4" Black Oxide Bolt
4	Black Tie Downs
8	10-24 x 2-3/4" F.H. Screws
8	10-24 Nylon Lock Nuts
4	1/4-20 x 1-1/2" Carriage Bolt

TOOLS REQUIRED

- Electric Drill
- Drill Bits - 7/32", 1/4", & 1/2"
- Screwdriver - common
- Open or Box End Wrenches - 7/16", 1/2", & 9/16"
- 3/8" Drive Ratchet
- Sockets - 7/16" & 1/2"
- C-clamp

Rev. A 7/04 Part No. 24-0136

weather guard®
DIVISION OF KNAACK MFG. CO.

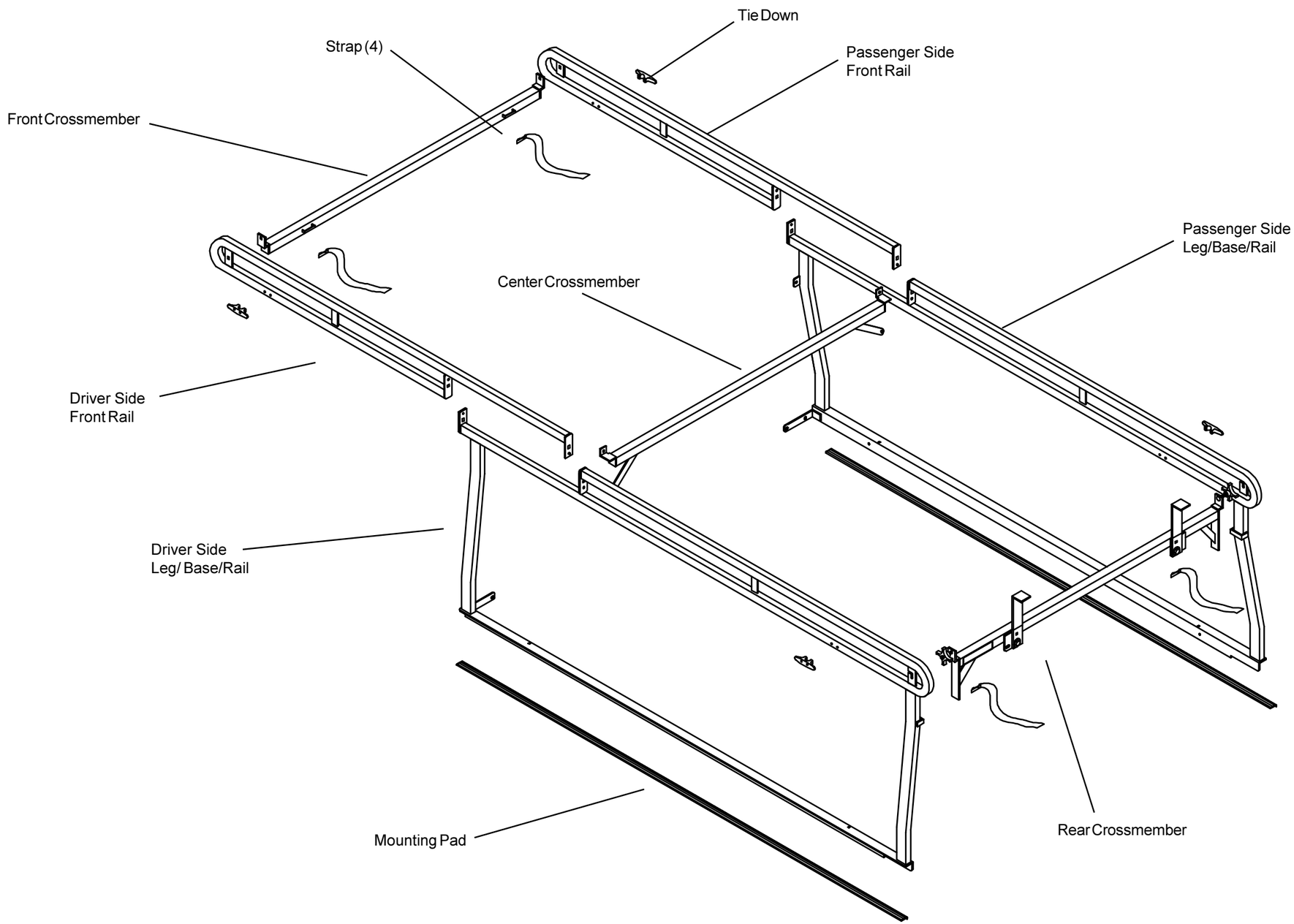
Tie Down
Strap (4)
Passenger Side
Front Rail
Front Crossmember
Passenger Side
Leg/Base/Rail
Center Crossmember
Driver Side
Front Rail
Driver Side
Leg/ Base/Rail
Mounting Pad
Rear Crossmember

STEP 2. Tie Down Installation.
Install tie downs where desired.
Put E-6000 sealant on the back of the tie downs and under nuts before installing.

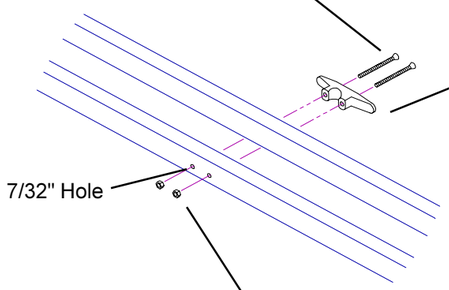

STEP 3. Mounting Pad Installation.
Place pads on the top of the bed. It may be necessary to hold the pads in place with small pieces of tape.

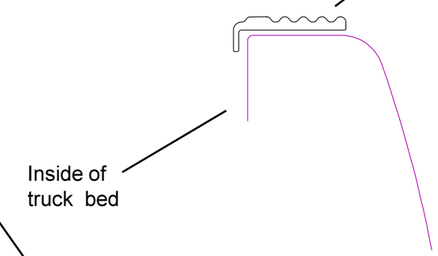

⚠ CAUTION

To keep debris out of your eyes when drilling, always wear protective eyewear.

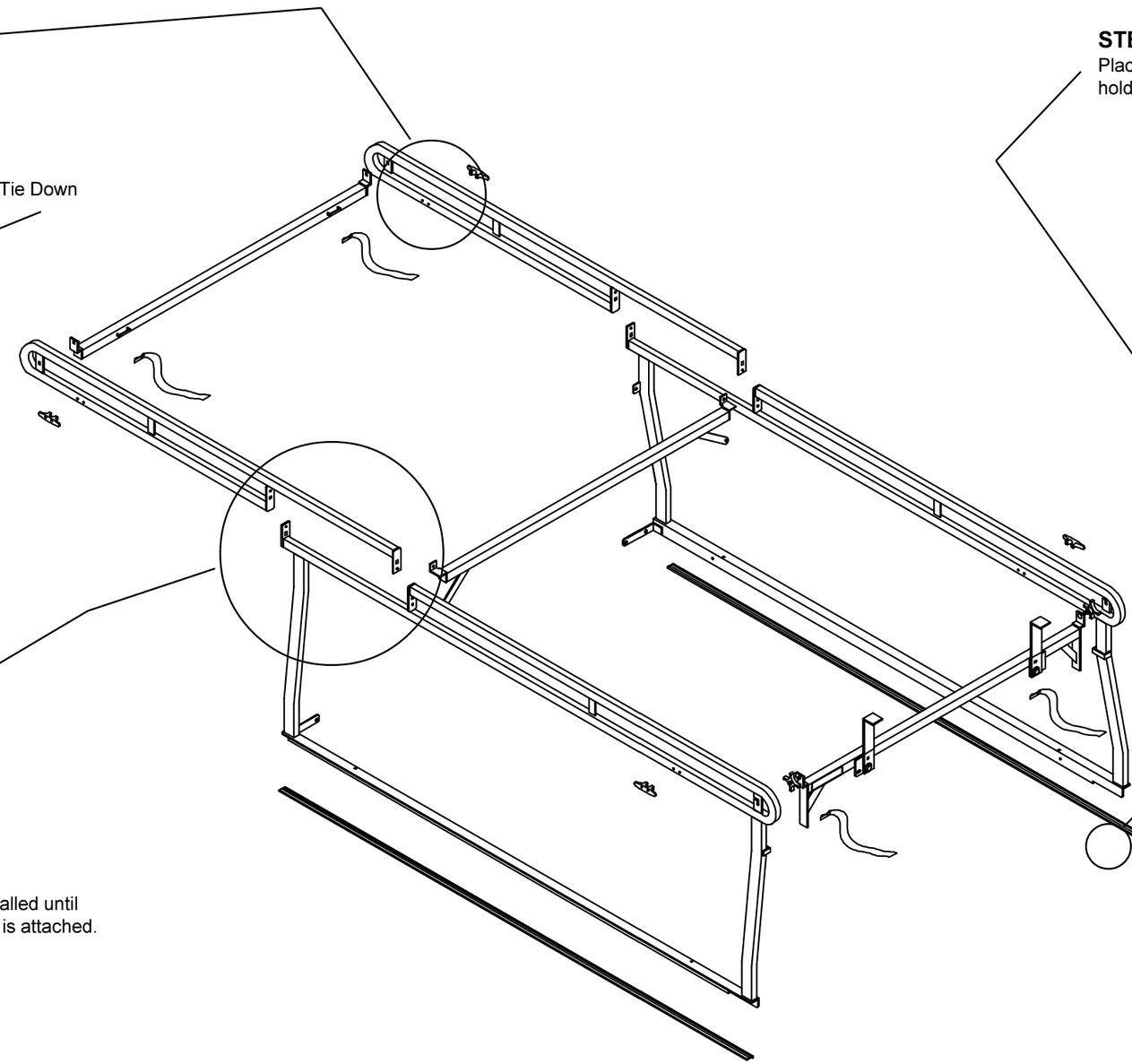

STEP 1. Rail Assembly.

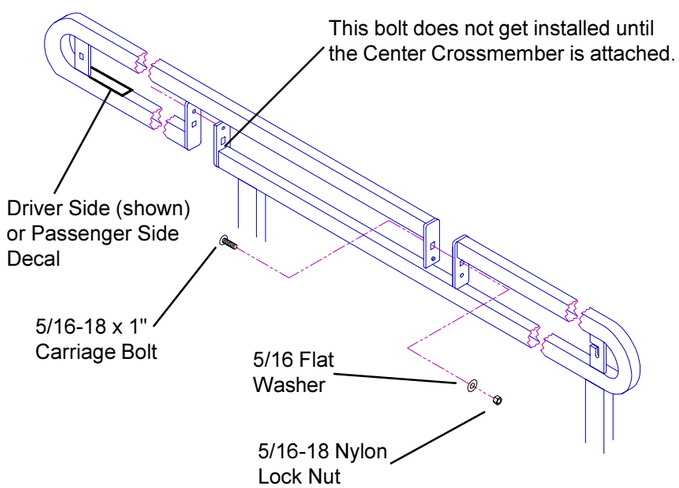

STEP 4. Rail and Rear Crossmember Installation
With the help of at least two other people lift one of the assembled sections onto the truck. One person should be in the truck to hold the first section while the other section is being lifted into position. Once both sections are positioned, install the rear crossmember as shown in STEP 5.

STEP 6. **Front Crossmember Assembly.**

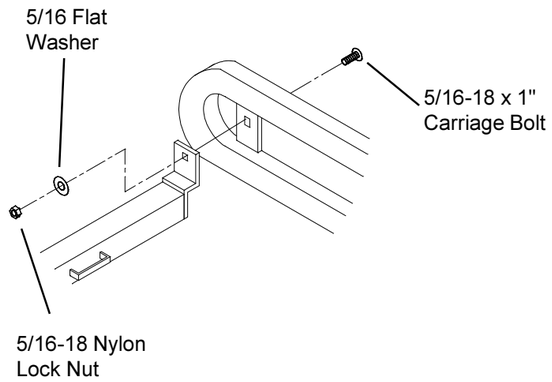

STEP 7. **Center Crossmember Assembly.**

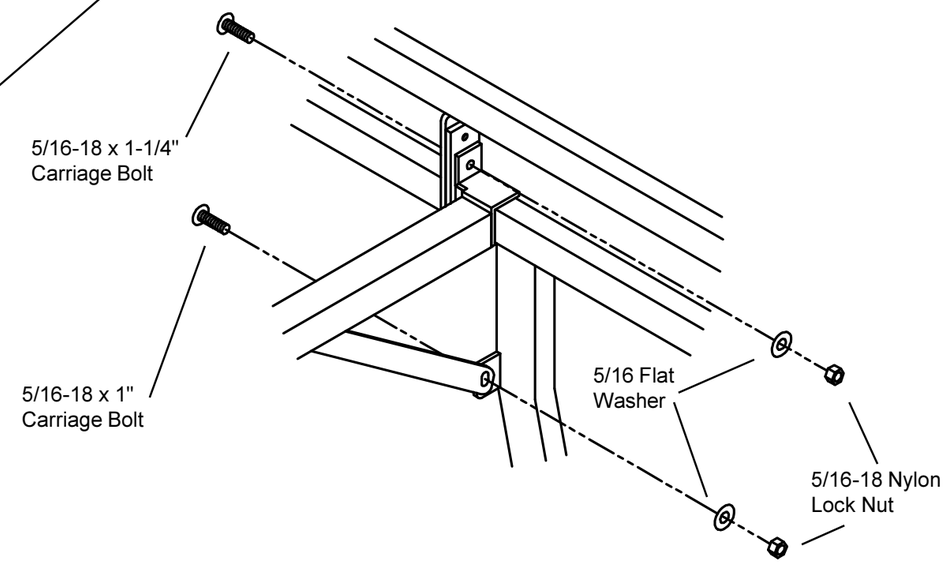

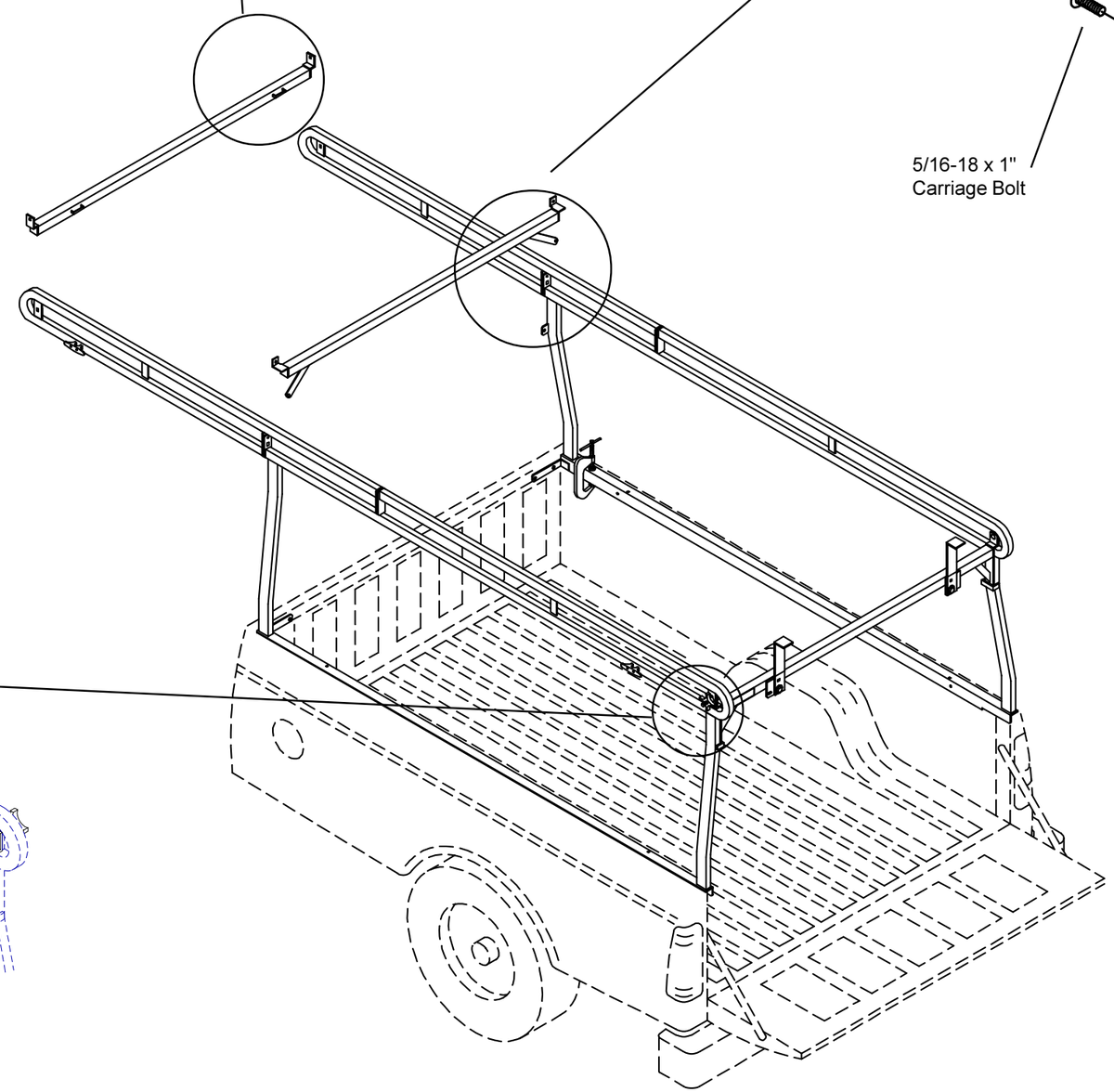

STEP 5. **Rear Crossmember Assembly.**
(Ladder Stop not shown for clarity)

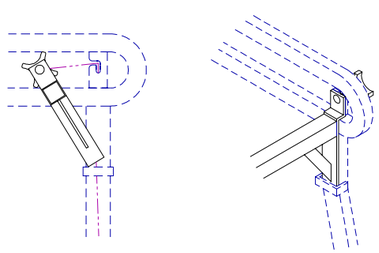

PERFORM THE FOLLOWING STEPS TO THE DRIVER SIDE & PASSENGER SIDE (Passenger Side Shown)

STEP 8. Tape Washer, Clamp, and Drill Front Side

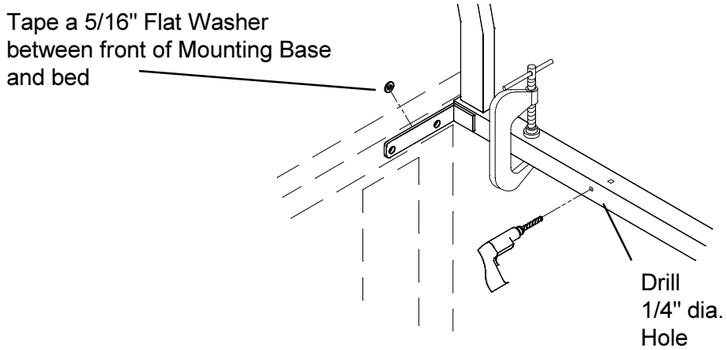

STEP 9. Unclamp, Remove Flat Washer, and Fasten Side

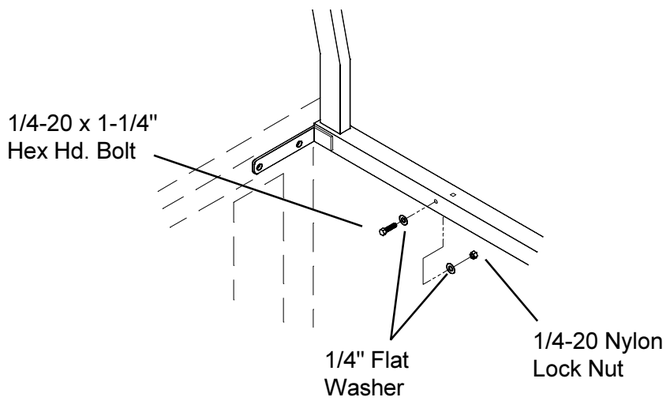

STEP 10. Drill Front and Top

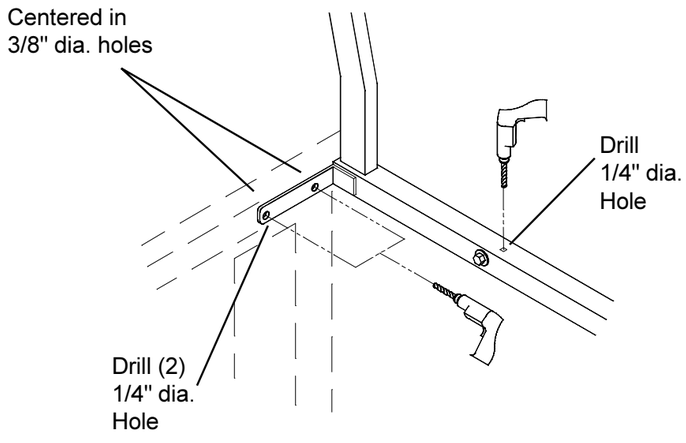

STEP 11. Unfasten Side, Move Rack out of the Way, Redrill Front Holes, and Install Blind Fasteners

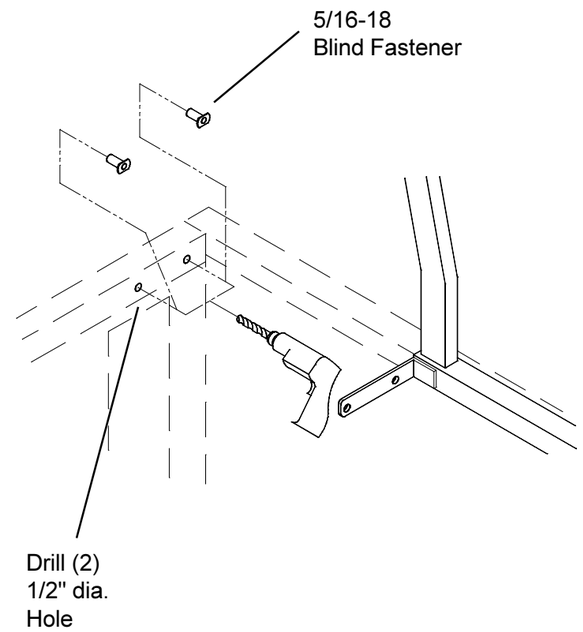

INSTALLATION PROCEDURE USING BLIND FASTENERS

Place a drop of oil on the black oxide bolt before assembling as shown at right. Place the Blind Fastener in the hole and use a 1/2" or 7/16" wrench to tighten black hex bolt until the blind fastener is fully seated. When setting black hex bolt, it will start out hard. As the Blind Fastener "bulbs" out it will get easier, until it bottoms out or sets. Make sure the Blind Fastener and Installation Tool do not turn during installation.

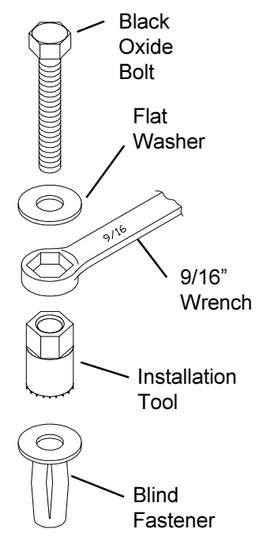

STEP 12. Install Front, Top, and Side Fasteners

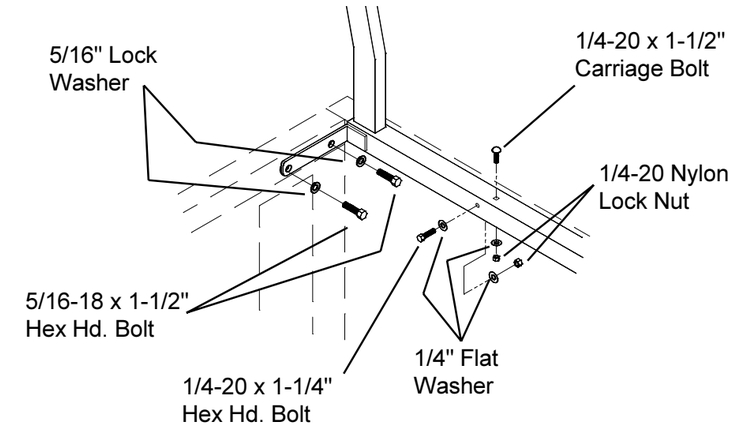

STEP 13. Clamp, Drill, and Fasten Rear Side

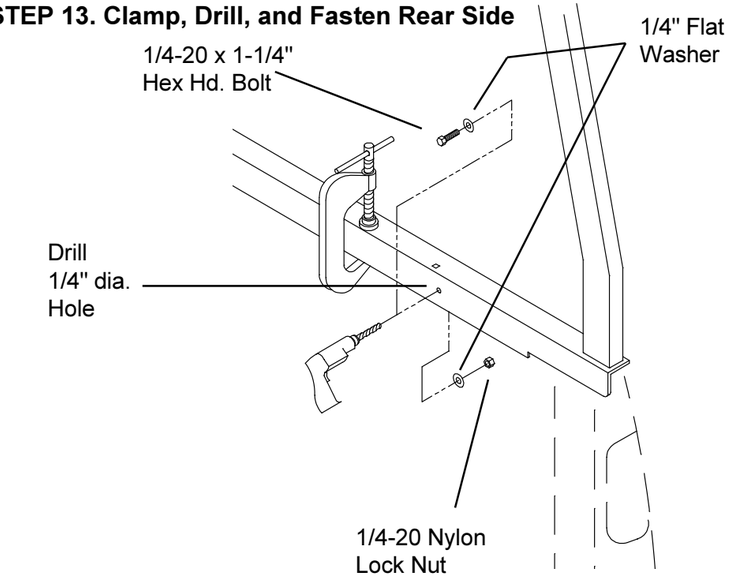

STEP 14. Remove Clamp, Drill, and Fasten Rear Top

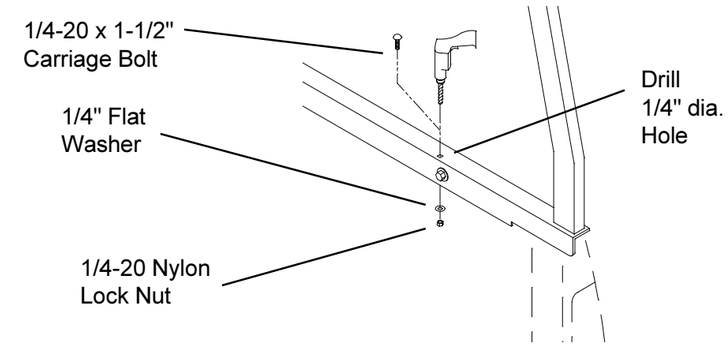

Bolt Chart

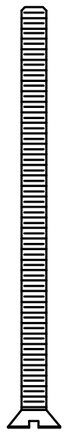

10-24 x 2-3/4"
F.H. Screw

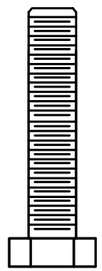

5/16-18 x 1-1/2"
Hex Hd. Bolt

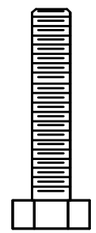

1/4-20 x 1-1/4"
Hex Hd. Bolt

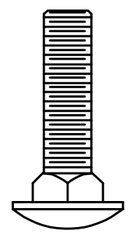

5/16-18 x 1-1/4"
Carriage Bolt

Nylon Lock Nuts

10-24

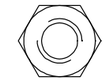

1/4-20

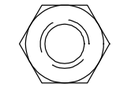

5/16-18

5/16-18 x 1"
Carriage Bolt

1/4-20 x 1-1/2"
Carriage Bolt

⚠ WARNING

Ladders must be secured per ANSI standard A142.2-1990 paragraph 8.4.4. Ladder damage will occur from road shock and vehicle vibration if the ladder is not properly secured to the ladder rack. Bouncing and side to side motion of a improperly secured ladder will cause wear and weaken the ladder. Using a damaged ladder could lead to a structural collapse and could result in a serious injury or death.

WEATHER GUARD® PRODUCT REFINISHING PROCEDURES

All WEATHER GUARD® products are finished with a polyester powder coating, and it is important to follow these procedures to get proper adhesion. As Knaack Manufacturing Co. cannot control the finishing of the products, the warranty for WEATHER GUARD® products on paint is not applicable on refinished products.

1. Sand the surface to be painted with 180-200 grit sand paper to rough up the surface. This should be followed by wet sanding with a 400 grit wet or dry paper.

2. Wipe down the sanded surface with ketone based thinner. This removes the dust and softens the powder coating for better paint adhesion.

3. Wipe sanded area with a tack rag to remove loose dust and particles before painting.

NOTE: Do not use a lacquer over the powdered coating.

- NOTICE -

Any modification or unintended use of this product shall immediately void all manufacturers warranties. Manufacturer disclaims all liability for injuries to persons or property resulting from any modification to, or unintended use of this product.

If you have any questions, please give us a call. **Call Toll Free 1-800-456-7865**

WEATHER GUARD® products are protected by one or more of the following patents or trademarks:
U.S. - 2228051, 842268, 1661625, 1663369, 4509787, 2434963; Canada - 282725, 1218968; U.K. - 1400720; N.Z. - 296049; Aus. - 761964

KNAACK MANUFACTURING COMPANY
420 E. TERRA COTTA AVENUE - CRYSTAL LAKE, ILLINOIS, USA 60014 - 815-459-6020

©2004 Knaack Manufacturing Company

KNAACK MANUFACTURING COMPANY

EMERSON Professional Tools