weather guard®

TRUCK AND VAN EQUIPMENT

OPERATORS MANUAL

Underbed Boxes

MODELS 524 THRU 562

WWW.WEATHERGUARD.COM

PRODUCT REGISTRATION

Model #:_____ Serial #:_____

For your convenience, place product registration tear-off sticker here

Purchase Date: _____

Place of Purchase:_____

Key Code: _____

–ATTENTION–

Read and understand all instructions and warnings before operating or using this product.

⚠ DANGER

Danger of explosion. Do not use this product for storing or transporting flammables, explosives, hazardous materials, or hazardous waste, such as containers of gasoline, solvents, gun powder, dynamite, propane tanks, acetylene tanks and cutting torches. This product is only intended and safe for use in storing and transporting small tools, equipment and other similar materials. Any modifications made to, or unintended use of this product, could create a hazardous condition that can cause death, serious personal injury or property damage.

⚠ CAUTION

To keep debris out of your eyes when checking the underside of the vehicle, or when drilling, always wear eyewear.

⚠ CAUTION

If welding is to be done on the vehicle chassis, disconnect the cables from the battery, to prevent shorting out electrical components on the vehicle

⚠ WARNING

If proper bracket support or angles are not used, the box could drop off the vehicle while it's moving and cause personal injury or property damage

⚠ WARNING

Prior to drilling, so as not to cut or puncture fuel tanks, fuel lines, brake lines, electric wires, etc., check under vehicle for locations.

⚠ WARNING

All floor mounting bolts near the gas tank area should be installed from the underside of the vehicle, to guard against the gas tank being punctured in the event of a collision. This would mean not using Blind Fastener in this area. Holes drilled in this area should be 3/8".

INSTALLATION INSTRUCTIONS

Due to the various chassis that this product can be used on, contact a truck equipment dealer for mounting procedures and support brackets or angles. If you decide to make these brackets or angles yourself, **do not use any steel less than 1/4" in thickness.**

Installation Instructions

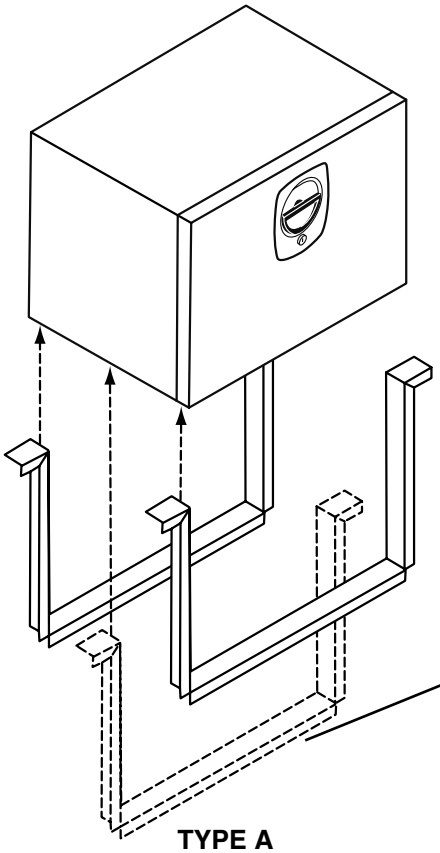

TYPE A

Type "A" brackets to be mounted at the front and rear edge of Underbed Box

All steel and aluminum boxes must be mounted with either Type "A" or Type "B" brackets

Under Body Mounting

The box must be mounted as shown or structural damage will occur to the box.

Stake Bed Top Mounting

The box must be mounted with the bottom fully supported or structural damage will occur to the box.

A third Type "A" bracket should be used in the center of 24" deep Underbeds

A third cross brace should be used in the center of the Type "B" bracket when mounting a 24" deep Underbed

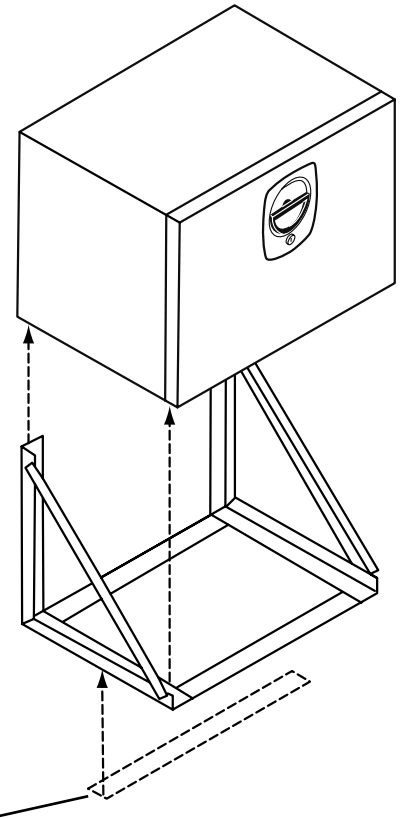

TYPE B

–NOTICE–

Any modification or unintended use of this product shall immediately void all manufacturers warranties. Manufacturer disclaims all liability for injuries to persons or property resulting from any modification to, or unintended use of this product.

LIMITED WARRANTY

This LIMITED WARRANTY is made by Knaack Manufacturing Company, 420 E. Terra Cotta Ave., Crystal Lake, Illinois to the original retail purchaser of KNAACK® or WEATHER GUARD® products.

KNAACK MANUFACTURING COMPANY WARRANTS THAT KNAACK OR WEATHER GUARD PRODUCTS WILL BE FREE FROM DEFECTS IN MATERIAL AND WORKMANSHIP FOR A PERIOD OF THREE (3) YEARS FROM DATE OF PURCHASE BY THE ORIGINAL RETAIL PURCHASER.

If, before the expiration of the Warranty period, purchaser discovers that the KNAACK or WEATHER GUARD product fails to fulfill the Warranty, purchaser shall contact Knaack Manufacturing Company to make arrangements for an inspection of the product. If Knaack Mfg. Co. determines a defect exists, Knaack Mfg. Co. shall, at its option and expense, repair or replace any defective part. All Warranty repairs shall be made by an authorized KNAACK Product dealer or Knaack Mfg. Co. approved service company.

This Warranty shall not apply if the KNAACK or WEATHER GUARD product has been subjected to misuse, abnormal service or handling, improper maintenance, or alterations made by anyone other than a KNAACK or WEATHER GUARD Product dealer or a Knaack Mfg. Co. approved service company.

THE WARRANTY PRINTED ABOVE IS THE ONLY WARRANTY APPLICABLE TO THIS PURCHASE. ALL OTHER WARRANTIES, EXPRESS OR IMPLIED, INCLUDING BUT NOT LIMITED TO THE IMPLIED WARRANTIES OF MERCHANTABILITY AND FITNESS FOR A PARTICULAR PURPOSE ARE HEREBY DISCLAIMED.

KNAACK MANUFACTURING COMPANY SHALL NOT BE LIABLE FOR ANY INCIDENTAL OR CONSEQUENTIAL DAMAGES ARISING OUT OF ANY BREACH OF THIS WARRANTY. NOR SHALL THE DAMAGES EXCEED THE RETURN AMOUNT OF THE PURCHASE PRICE PAID BY THE ORIGINAL PURCHASER.

This Warranty is in lieu of all Warranties express or implied. The terms of this Warranty shall not be modified by any party, their successors or assigns. This Warranty gives you specific legal rights, and you may also have other rights which vary from state to state.

Product fits based on vehicle design available at the revision date. Vehicle manufacturers may change specs after the revision date, so if you have a vehicle produced with a model year date after the revision date, please contact your distributor or Knaack Mfg. Co. to verify fitting of product to vehicle.

KNAACK MANUFACTURING COMPANY

WEATHER GUARD Products are protected by one or more of the following patents: U.S. - 842268, 1661625, 1663369; Canada - 282725; U.K. - 1400720; other patents and trademarks pending.

KNAACK MANUFACTURING COMPANY
420 E. Terra Cotta Ave, Crystal Lake, IL 60014, 1-800-456-7865
WWW.WEATHERGUARD.COM
©2004 Knaack Manufacturing Company

Rev. A 04/05 Part No. 24-0187

EMERSON™
Professional Tools