ASSEMBLY AND INSTALLATION INSTRUCTIONS
Model 201

IMPORTANT BEFORE YOU BEGIN

Read these instructions completely before installation.

BOLT KIT

#32-0152 has been provided with this model. Check this bolt kit to be sure the following parts are included:

Qty.	Description
8	1/4-20 x 5/8" Hex Hd. Bolts
8	1/4-20 nylon lock nut

TOOLS REQUIRED

- Electric drill with 5/16" drill bit
- 7/16" open or box end wrench (2)

INSTALLATION INSTRUCTIONS

1. Pull both end Drawers out completely. Place mounting brackets on the drawer unit, align surface holes, then fasten.

2. Place unit inside, all the way against the rear wall. Mark through the mounting bracket holes for location and remove the unit.

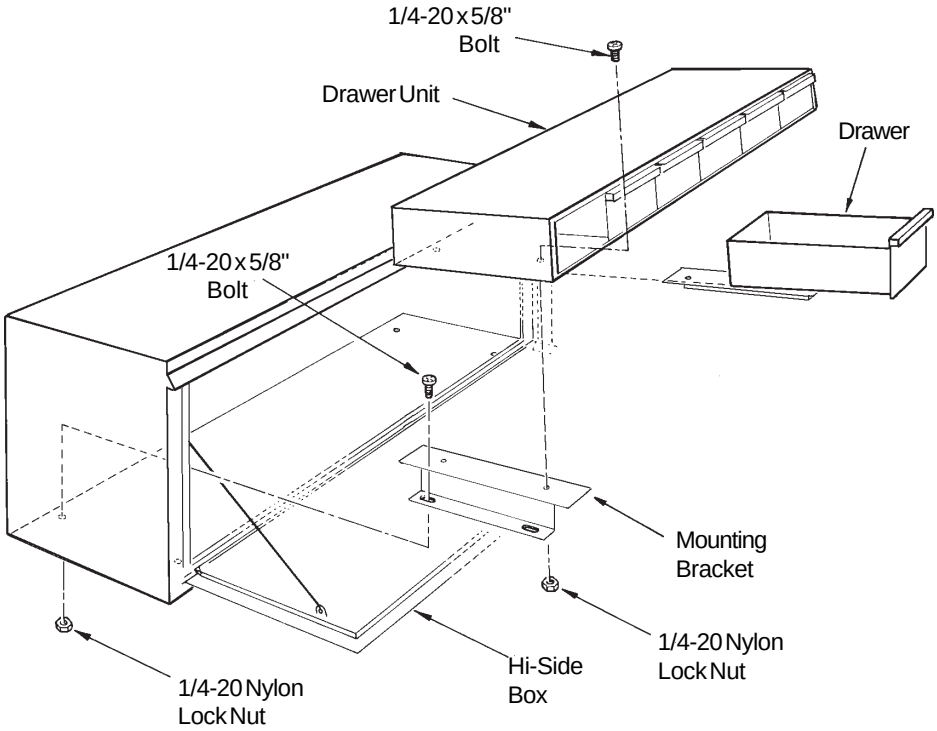

⚠ CAUTION

To keep debris out of your eyes when checking the underside of the vehicle, or when drilling, always wear protective eyewear.

3. Drill the holes in the side box.

4. Place assembled drawer unit into side box and fasten with remainder of bolts and nuts.

Rev. C 11/99 Part No. 24-0201

weather guard®
DIVISION OF KNAACK MFG. CO.

- NOTICE -

Any modification or unintended use of this product shall immediately void all manufacturers warranties. Manufacturer disclaims all liability for injuries to persons or property resulting from any modification to, or unintended use of this product.

If you have any questions, please give us a call. **Call Toll Free 1-800-456-7865**

WEATHER GUARD® products are protected by one or more of the following trademarks:
U.S. - 842268, 1661625, 1663369, 2228051; Canada - 282725; U.K. - 1400720; other trademarks pending.

WG-Ti™

KNAACK MANUFACTURING COMPANY
420 E. TERRA COTTA AVENUE - CRYSTAL LAKE, ILLINOIS, 60014 - 815-459-6020

©Knaack Manufacturing Co. 1999