ASSEMBLY AND INSTALLATION INSTRUCTIONS
Aluminum Conduit Carrier - Model 237

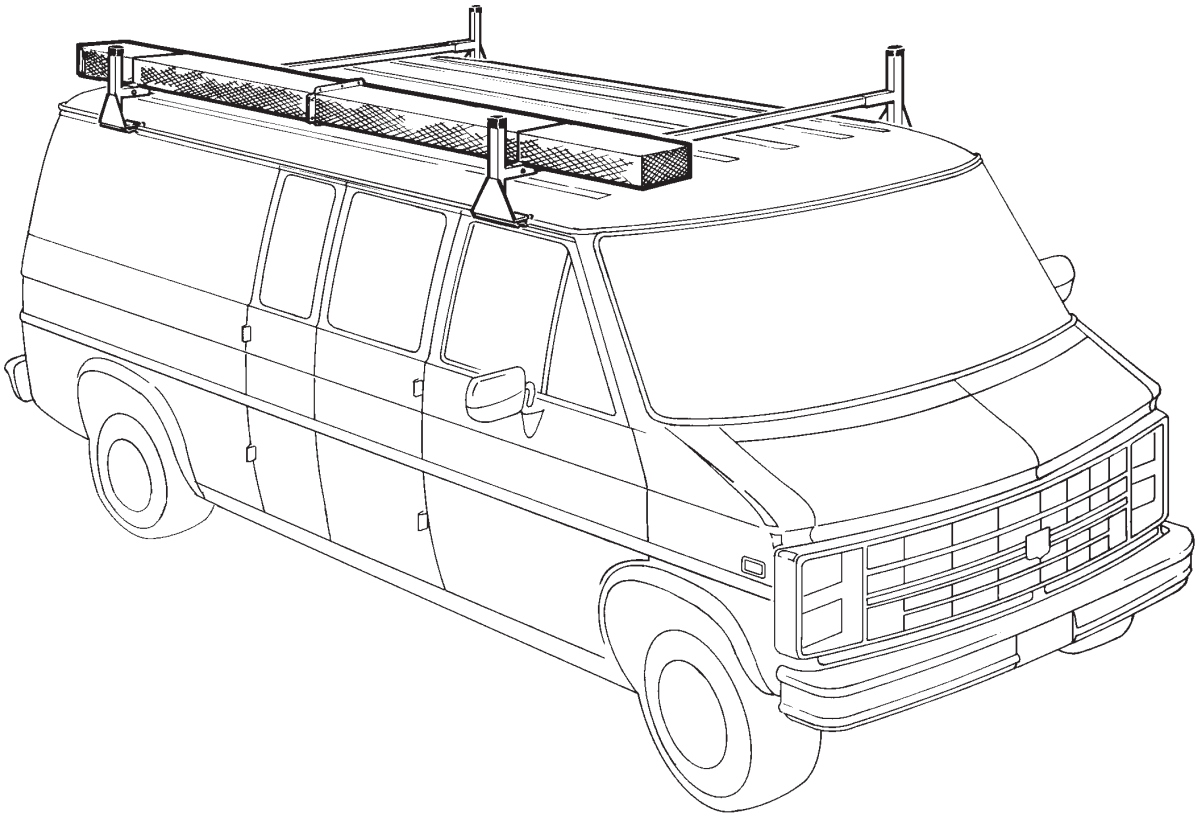

IMPORTANT BEFORE YOU BEGIN

Read these instructions and warnings completely before installation.

⚠ WARNING

This product is only intended for, and only safe for, storing and transporting tubing, pipe and conduit. Any modifications made to this product, or use of this product for any other purpose than its intended use, could create a hazardous condition that can cause serious personal injury or property damage.

BOLT KIT

Bolt Kit #32-0237 is provided with your Conduit Carrier. Check this bolt kit to be sure the following parts are included:

Quan.	Description
4	#12-24 Nylon Lock Nuts (**black dichromate**)
10	1/4-20 x 3/4" Hex Hd. Bolt
3	1/4-20 x 5/8" Hex Hd. Bolt
13	1/4-20 Nylon Lock Nuts
20	1/4" Flat Washers

PARTS LIST

- 1- Front Body
- 1- Rear Body Assembly
- 1- Door Assembly
- 1- Door Stop
- Weatherstripping (bulk)
- 2- "U" Clamps
- 4- Clamp Brackets

TOOLS REQUIRED

- 7/16" Open or Box End Wrench (2)
- 3/8" Open or Box End Wrench
- Razor knife or scissors

Rev. F 4/97 Part No. 24-2370

weather guard®
DIVISION OF KNAACK MFG. CO.

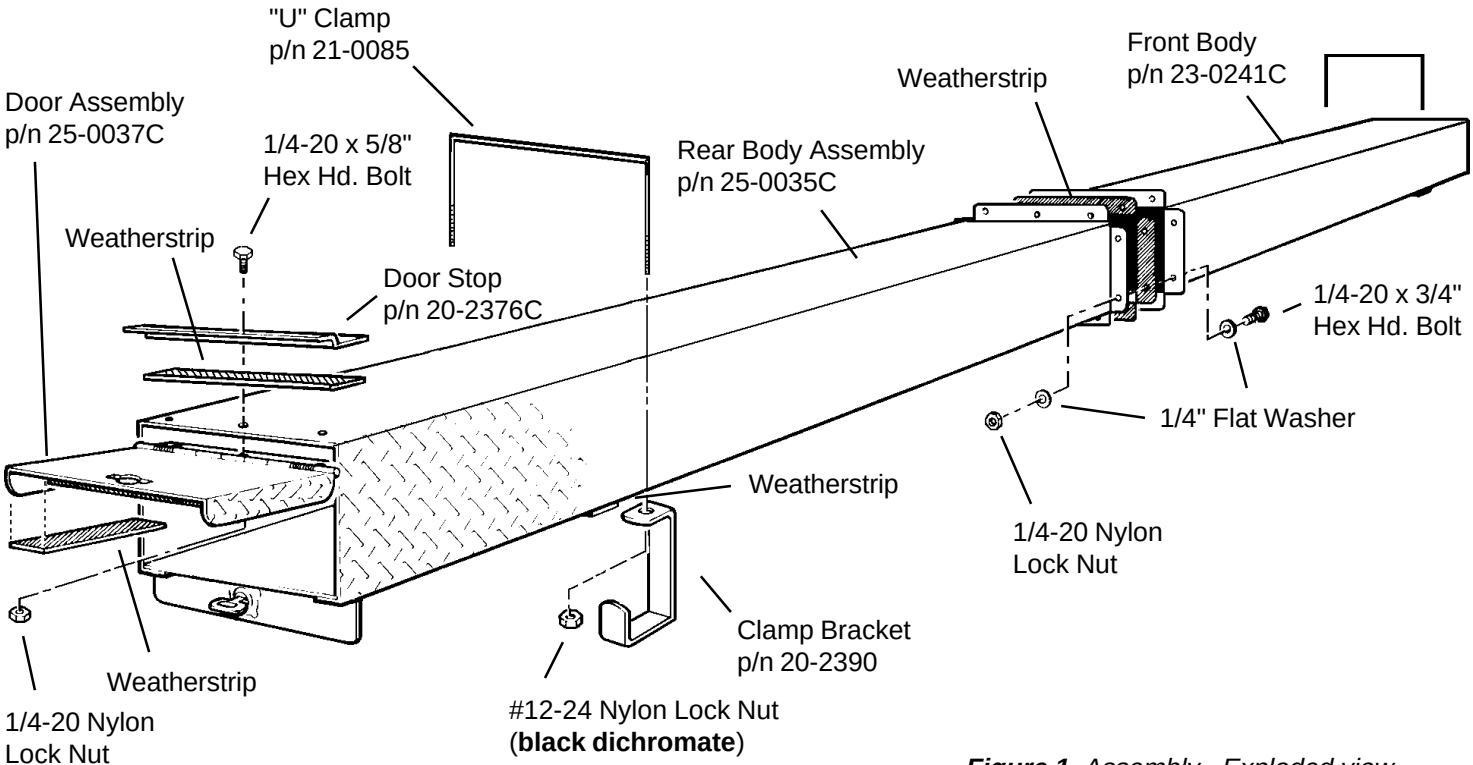

Figure 1. *Assembly - Exploded view*

ASSEMBLY INSTRUCTIONS

1. Cut and adhere Weatherstripping over the Door Stop mounting holes on the Rear Body Assembly (*see Figure 2.*).

2. Place the Door Stop on top of the Rear Body Assembly and the Door inside. Poke the fasteners through the Weatherstrip, and loosely fasten the Door Stop and Door. Center the Door on the Rear Body Assembly, then tighten the bolts (*see Figure 3.*).

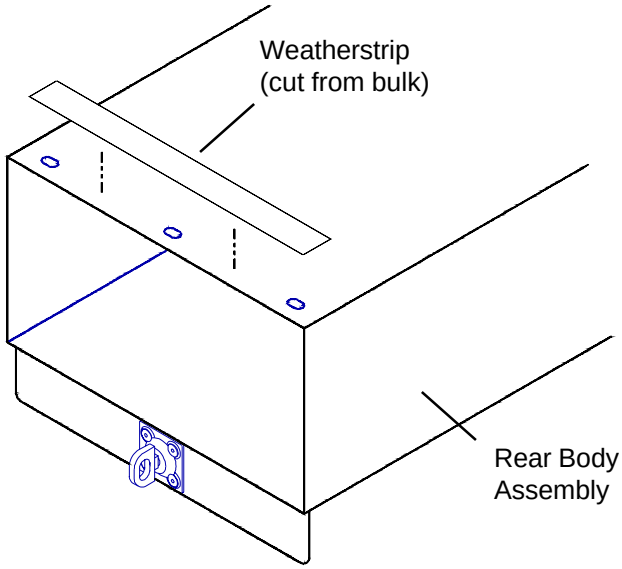

Figure 2. *Weatherstripping Rear Body Assembly*

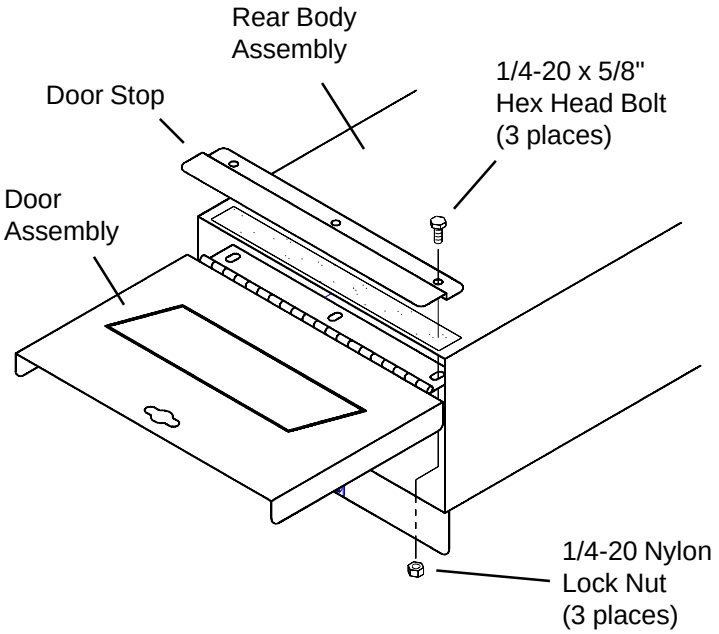

Figure 3. *Door Stop and Door to Body Assembly*

3. Open the Door, cut and adhere Weatherstripping to fit inside the Door where it touches the Rear Body Assembly (*see Figure 4.*). Be sure you don't cover the latch hole.

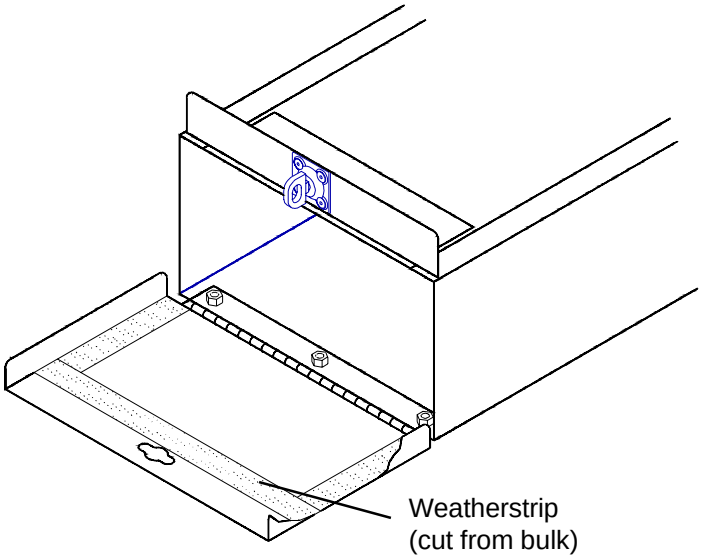

Figure 4. *Door Assembly Weatherstripping*

4. Cut and adhere Weatherstripping to fit the attaching flanges on the Front Body (*see Figure 5.*).

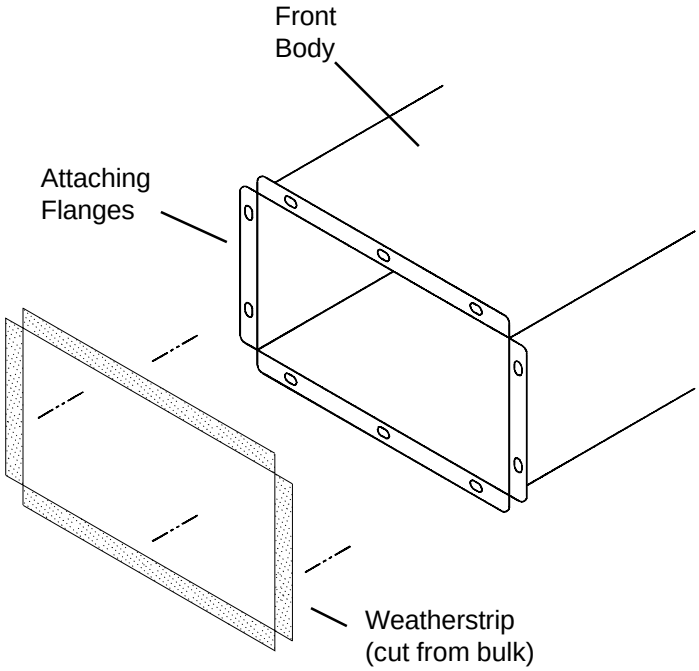

Figure 5. *Front Body Weatherstripping*

5. Fasten the Front Body to the Rear Body Assembly (*see Figure 6.*). It will be necessary to poke the bolts through the adhered Weatherstripping.

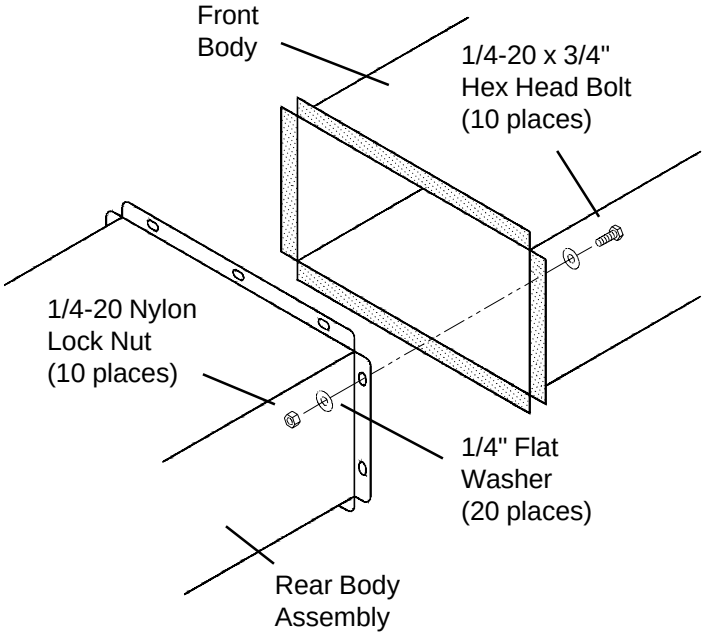

Figure 6. *Rear Body Assembly to Front Body fastening*

6. Place the assembled unit on the vehicle roof rack, positioning as shown in *Figure 7.*, and allowing for rear door swing-up when installed on some mini vans.

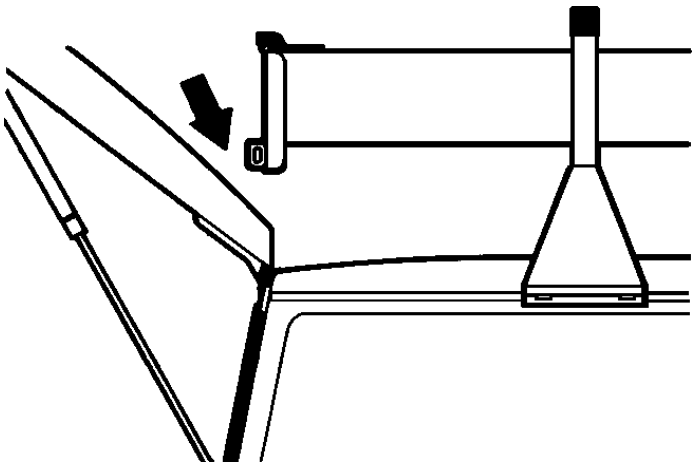

Figure 7. *Mini Van Door Clearance*

7. Mark the Conduit Carrier where it lays on the van rack crossmembers. Remove the Conduit Carrier from the van rack. Adhere Weatherstripping to the underside of the unit where it laid on the crossmembers (*see Figure 8.*).

8. Place the Conduit Carrier in position on the van rack. Install the "U" Clamps and Clamp Brackets (*see Figure 9.*). (*See Figures 10a, 10b or 10c for installation of "U" Clamps and Clamp Brackets for your crossmember*).

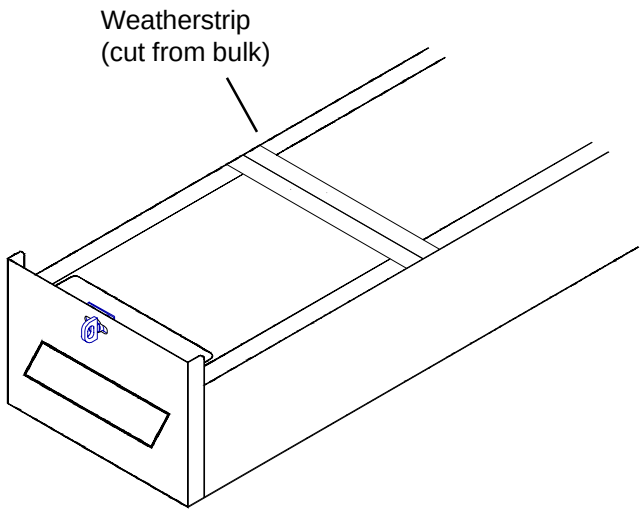

Figure 8. *Assembly Weatherstripped for Crossmember*

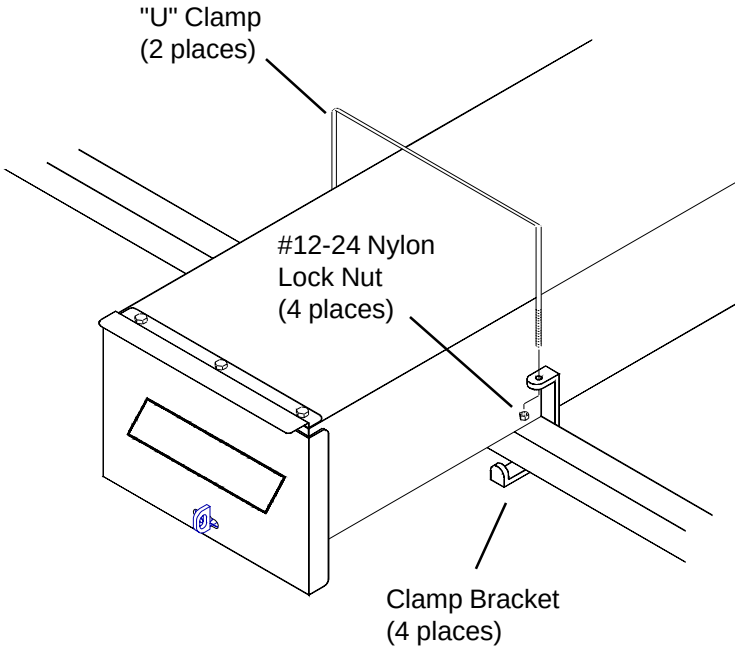

Figure 9. *Body to Crossmember Fastening*

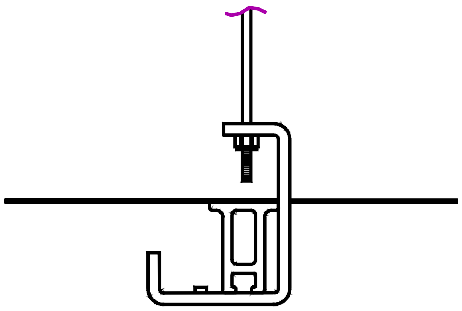

Figure 10a. *Installation on a 211 aluminum crossmember*

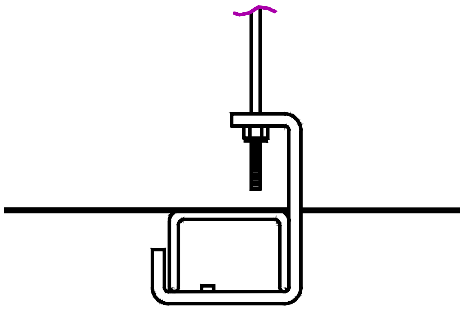

Figure 10b. *Installation on a channel shaped crossmember*

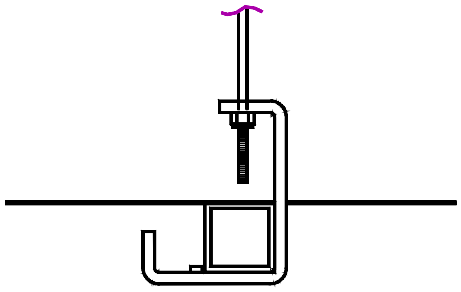

Figure 10c. *Installation on a square shaped crossmember*

- NOTICE -

Any modification or unintended use of this product shall immediately void all manufacturers warranties. Manufacturer disclaims all liability for injuries to persons or property resulting from any modification to, or unintended use of this product.

If you have any questions, please give us a call. **Call Toll Free 1-800-456-7865**

Weather Guard® products are protected by one or more of the following patents or trademarks:
U.S. - 842268, 1661625, 1663369; Canada - 282725; U.K. - 1400720; other patents pending.

KNAACK MANUFACTURING COMPANY
420 E. TERRA COTTA AVENUE - CRYSTAL LAKE, ILLINOIS, 60014 - 815-459-6020
©1991 Knaack Manufacturing Company